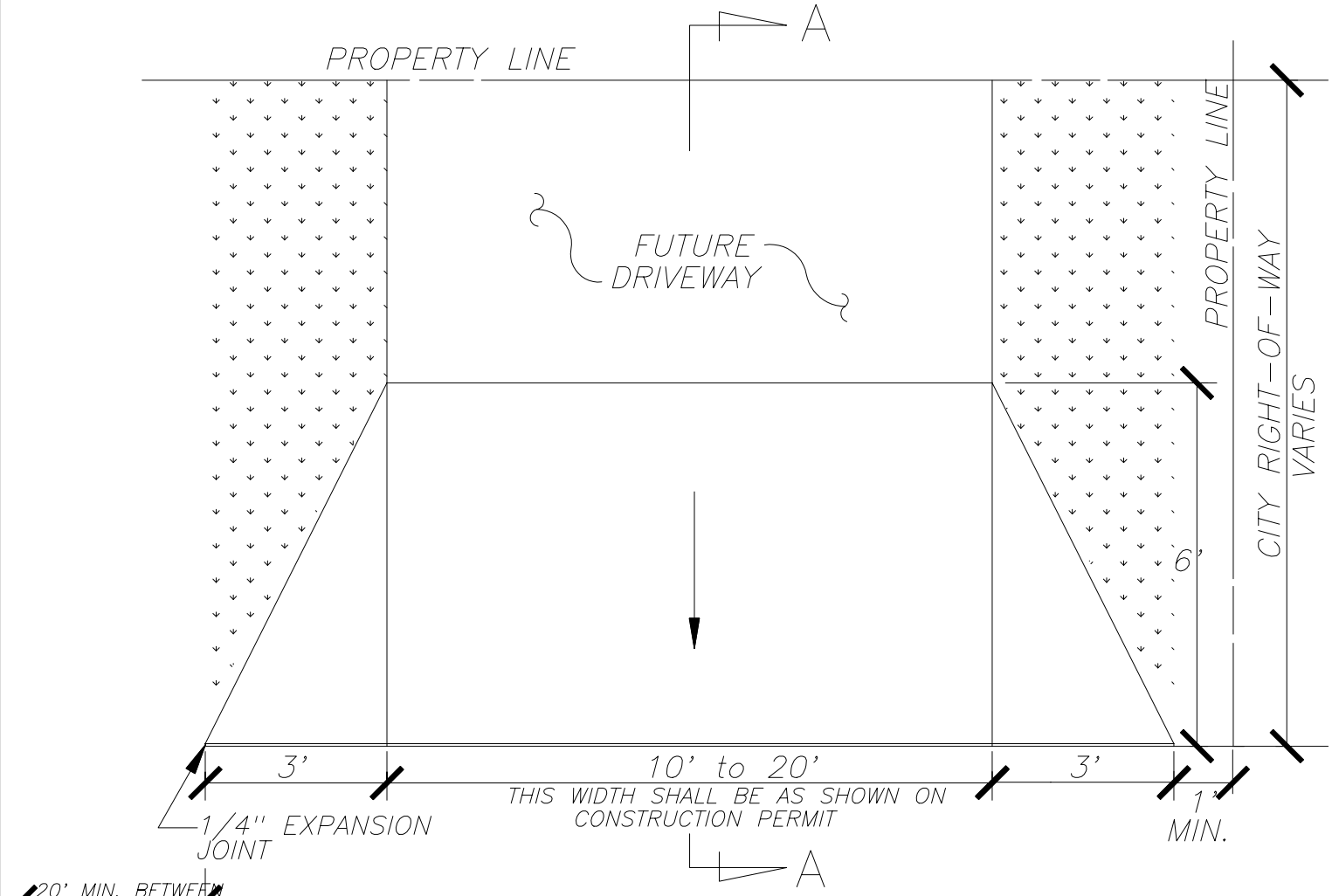

PLAN VIEW

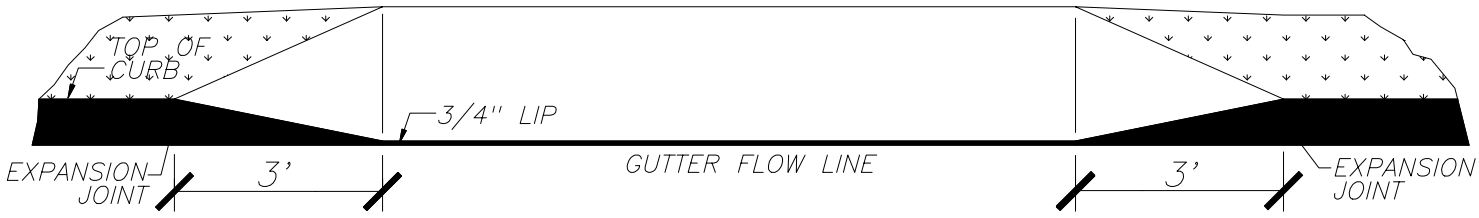

PROFILE VIEW

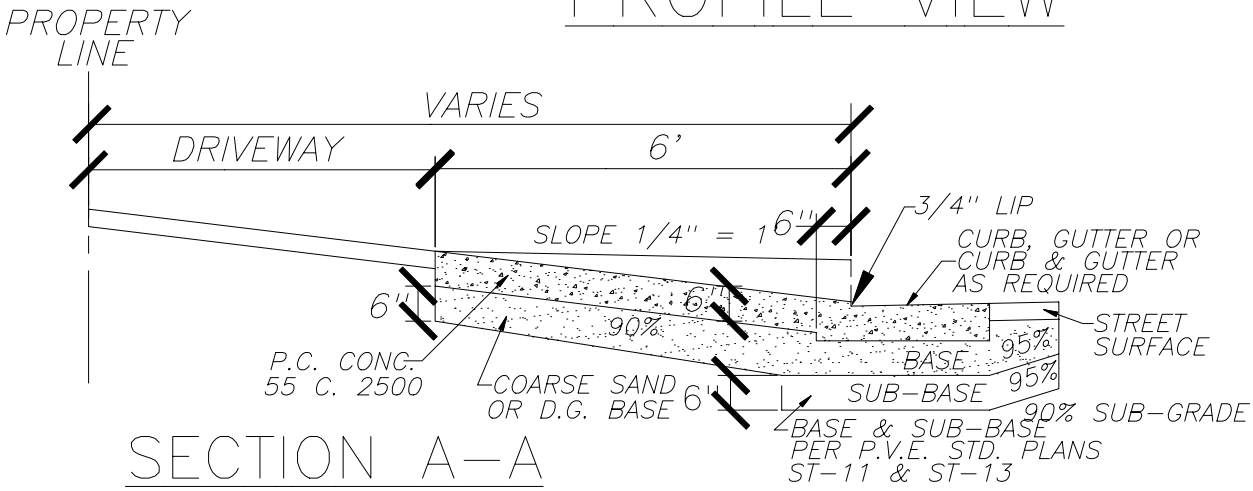

SECTION A–A

APPROVED FOR CONSTRUCTION	STANDARD DRIVEWAY APPROACH
CITY ENGINEER RCE NO. C049632	City of Palos Verdes Estates
LAST REVISION DATE	P.V.E. STD. PLAN ST–10
APRIL 28, 2000	